7. Schematic Diagram

7-1 CD: MM-L2

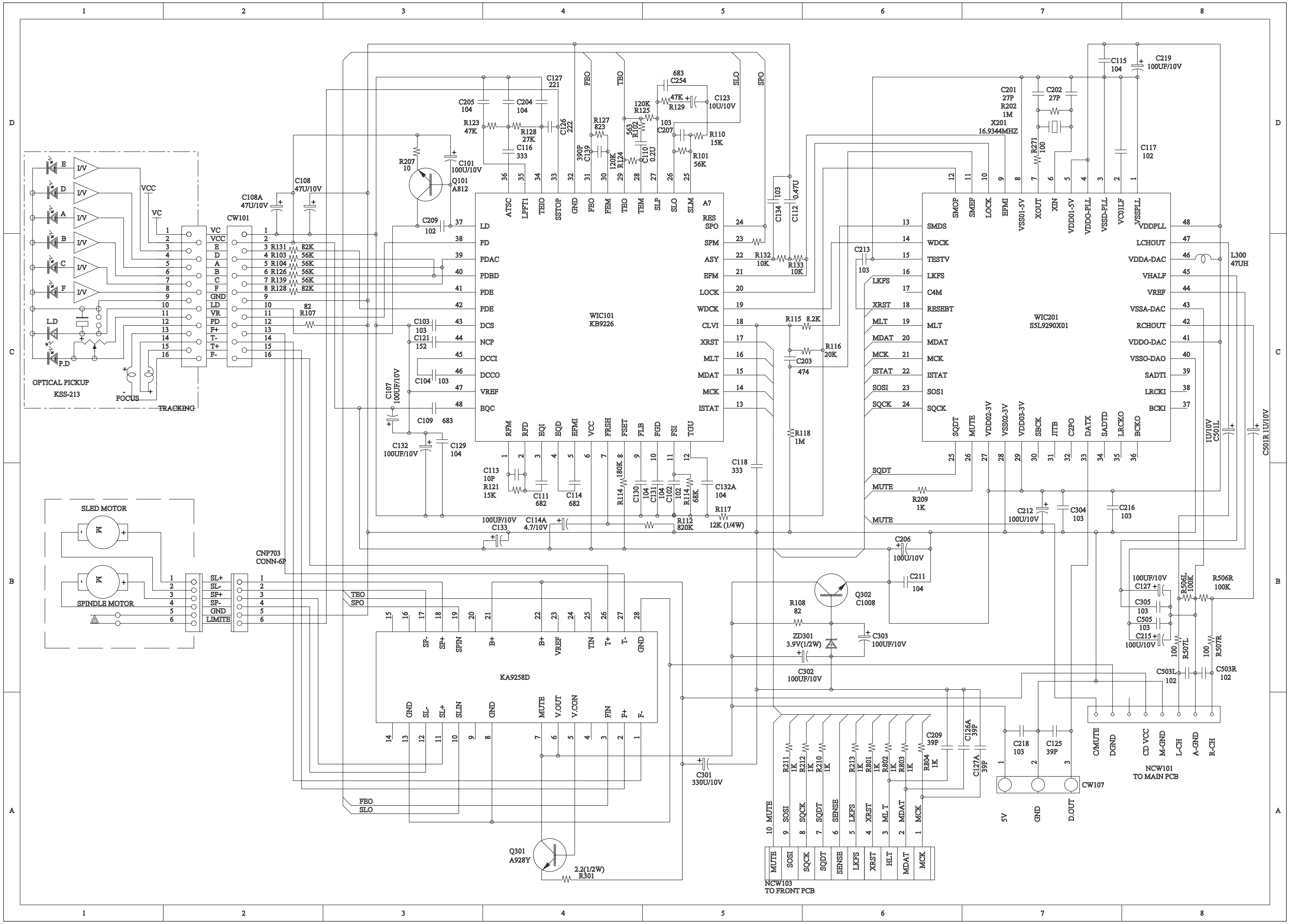

WIC101
KB9226
WIC201
S5L9290X01
KA9258D
OPTICAL PICKUP
KSS-213
FOCUS
TRACKING
CW101
SLED MOTOR
SPINDLE MOTOR
CNP703
CONN-6P
Q101
A812
Q301
A928Y
Q302
C1008
ZD301
3.9V(1/2W)
X201
16.9344MHZ
L300
47UH
CW107
5V
GND
D.OUT
NCW101
TO MAIN PCB
C/MUTE
DGND
CD VCC
M-GND
L-CH
A-GND
R-CH
NCW103
TO FRONT PCB
MUTE
SOSI
SQCK
SQDT
SENSE
LKFS
XRST
MLT
MDAT
MCK
TEO
SPO
FEO
SLO
C301
330U/10V
R301
2.2(1/2W)

7-2 FRONT ; MM-L2

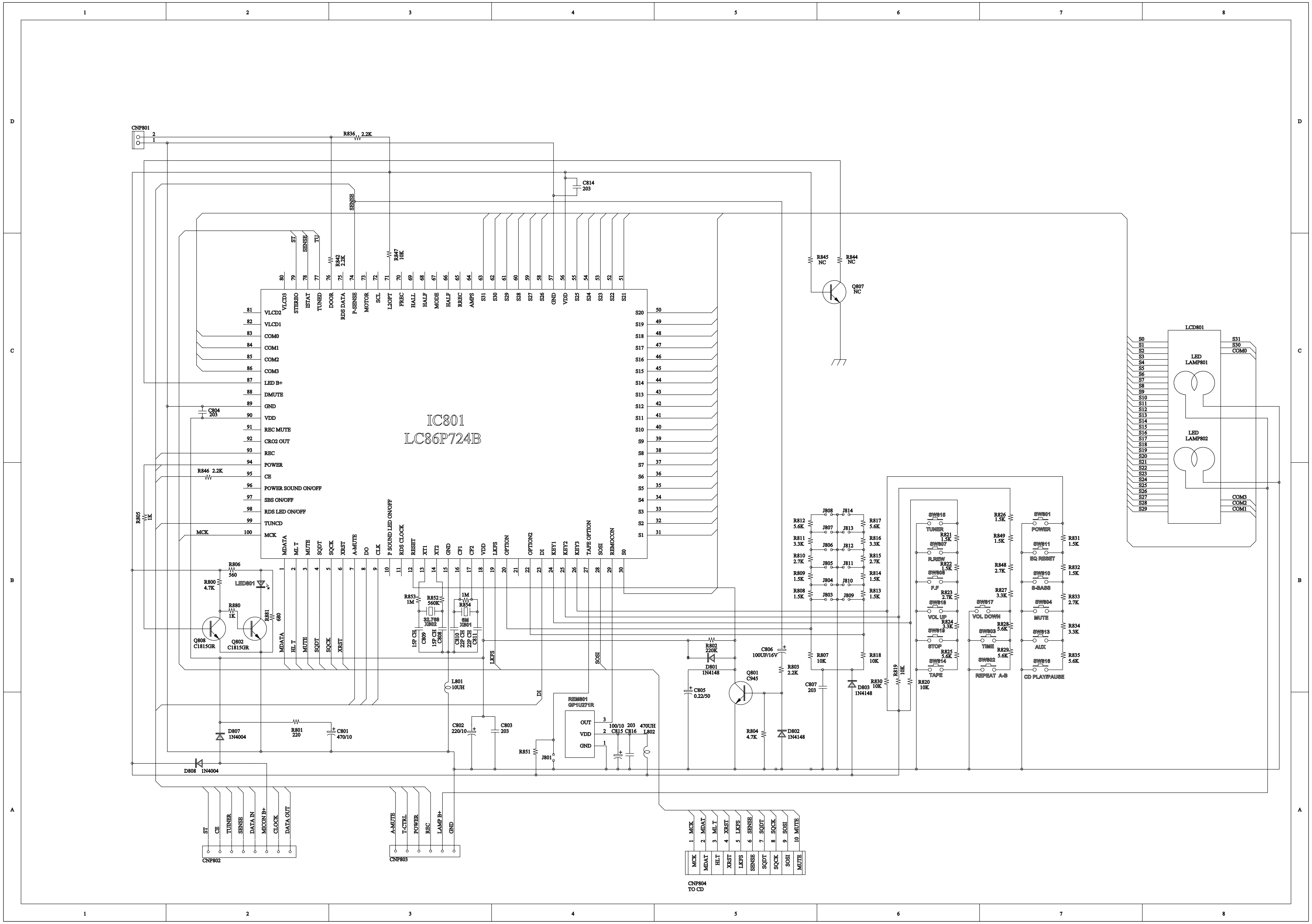

IC801
LC86P724B
CNP801
CNP802
CNP803
CNP804
TO CD
LCD801
LED LAMP801
LED LAMP802
REM801
GP1U271R
OUT
VDD
GND
Q801
C945
Q802
C1815GR
Q808
C1815GR
Q807
NC
LED801
D801
1N4148
D802
1N4148
D803
1N4148
D807
1N4004
D808
1N4004
L801
10UH
L802
470UH
X801
X802
32.768
R836 2.2K
R842 2.2K
R847 10K
R845 NC
R844 NC
R846 2.2K
R805 1K
R806 560
R800 4.7K
R880 1K
R881 680
R801 220
R851
R852 560K
R853 1M
R854 1M
R802 220K
R803 2.2K
R804 4.7K
R807 10K
R818 10K
R819 10K
R820 10K
R830 10K
C801 470/10
C802 220/10
C803 203
C804 203
C805 0.22/50
C806 100UF/16V
C807 203
C809 15P CH
C808 15P CH
C810 22P CH
C811 22P CH
C814 203
C815 100/10
C816 203
J801
SW815 TUNER
SW807 R.REW
SW808 F.F
SW818 VOL UP
SW819 STOP
SW814 TAPE
SW817 VOL DOWN
SW803 TIME
SW802 REPEAT A-B
SW801 POWER
SW811 EQ RESET
SW810 S-BASS
SW804 MUTE
SW813 AUX
SW816 CD PLAY/PAUSE
ST
CE
TUNER
SENSE
DATA IN
MICON B+
CLOCK
DATA OUT
A-MUTE
T-CTRL
POWER
REC
LAMP B+
GND
MCK
MDAT
MLT
XRST
LKFS
SQDT
SQCK
SOSI
MUTE

7-3 CD/FRONT ; MM-L4

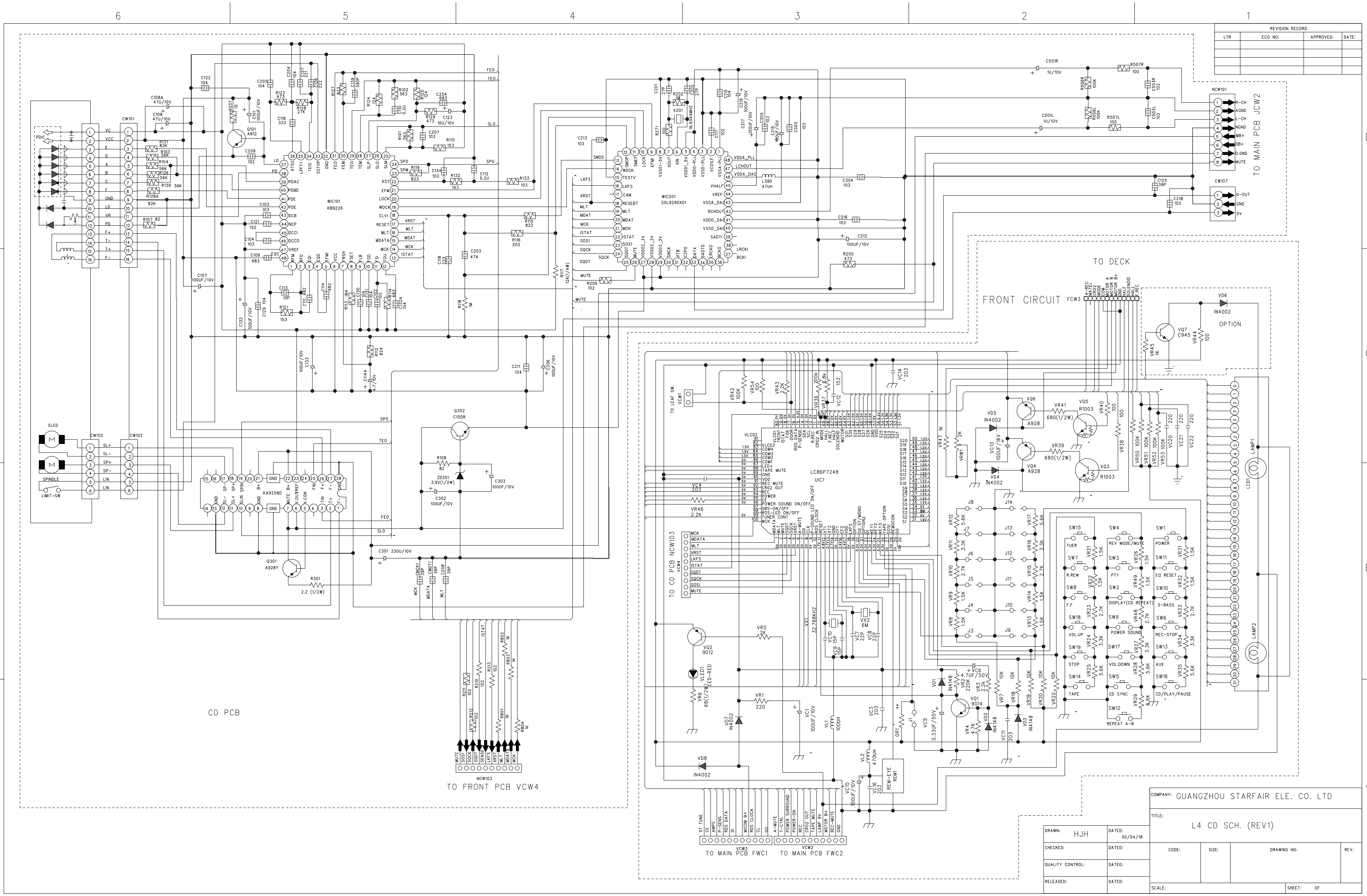

6
5
4
3
2
1
D
C
B
A
REVISION RECORD
LTR
ECO NO:
APPROVED:
DATE:
WIC101
KB9226
WIC201
S5L9290X01
KA9258D
LC86P7248
UIC1
CW101
CW102
PDIC
SLED
SPINDLE
LIMIT-SW
Q101
A812
Q301
A928Y
Q302
C1008
NCW101
TO MAIN PCB JCW2
CW107
D-OUT
GND
5V
R-CH
AGND
L-CH
NGND
MB+
DB+
D.GND
MUTE
CD PCB
NCW103
TO FRONT PCB VCW4
TO CD PCB NCW103
VCW4
TO DECK
FRONT CIRCUIT
FCW3
OPTION
TO LEAF SW.
VCW1
VQ1
9014
VQ2
9012
VQ3
R1003
VQ4
A928
VQ5
R1003
VQ6
A928
VQ7
C945
VX1
32.768KHZ
VX2
6M
REM-EYE
REM1
LCD1
LAMP1
LAMP2
SW1
POWER
SW2
DISPLAY(CD REPEAT)
SW3
PTY
SW4
REV MODE/MUTE
SW5
CD SYNC
SW6
REC-STOP
SW7
R.REW
SW8
F.F
SW9
POWER SOUND
SW10
S-BASS
SW11
EQ RESET
SW12
REPEAT A-B
SW13
AUX
SW14
TAPE
SW15
TUER
SW16
CD/PLAY/PAUSE
SW17
VOL.DOWN
SW18
VOL.UP
SW19
STOP
VCW3
TO MAIN PCB FWC1
VCW2
TO MAIN PCB FWC2
ST TUNE
CE
AMPS
P-SENS
RDS DATA
DI
MICOM B+
RDS CLOCK
CL
DO
A-MUTE
T-CTRL
POWER SURROUND
POWER-ON
REC
CRO2 OUT
TAPE MUTE
LAMP 9V
MOTOR B+
REC-MUTE
GND

COMPANY: GUANGZHOU STARFAIR ELE. CO. LTD

TITLE: L4 CD SCH. (REV1)

DRAWN: HJH	DATED: 00/04/18	CODE:	SIZE:	DRAWING NO:	REV:
CHECKED:	DATED:				
QUALITY CONTROL:	DATED:				
RELEASED:	DATED:	SCALE:		SHEET: OF	

7-4 MAIN/POWER : MM-L2

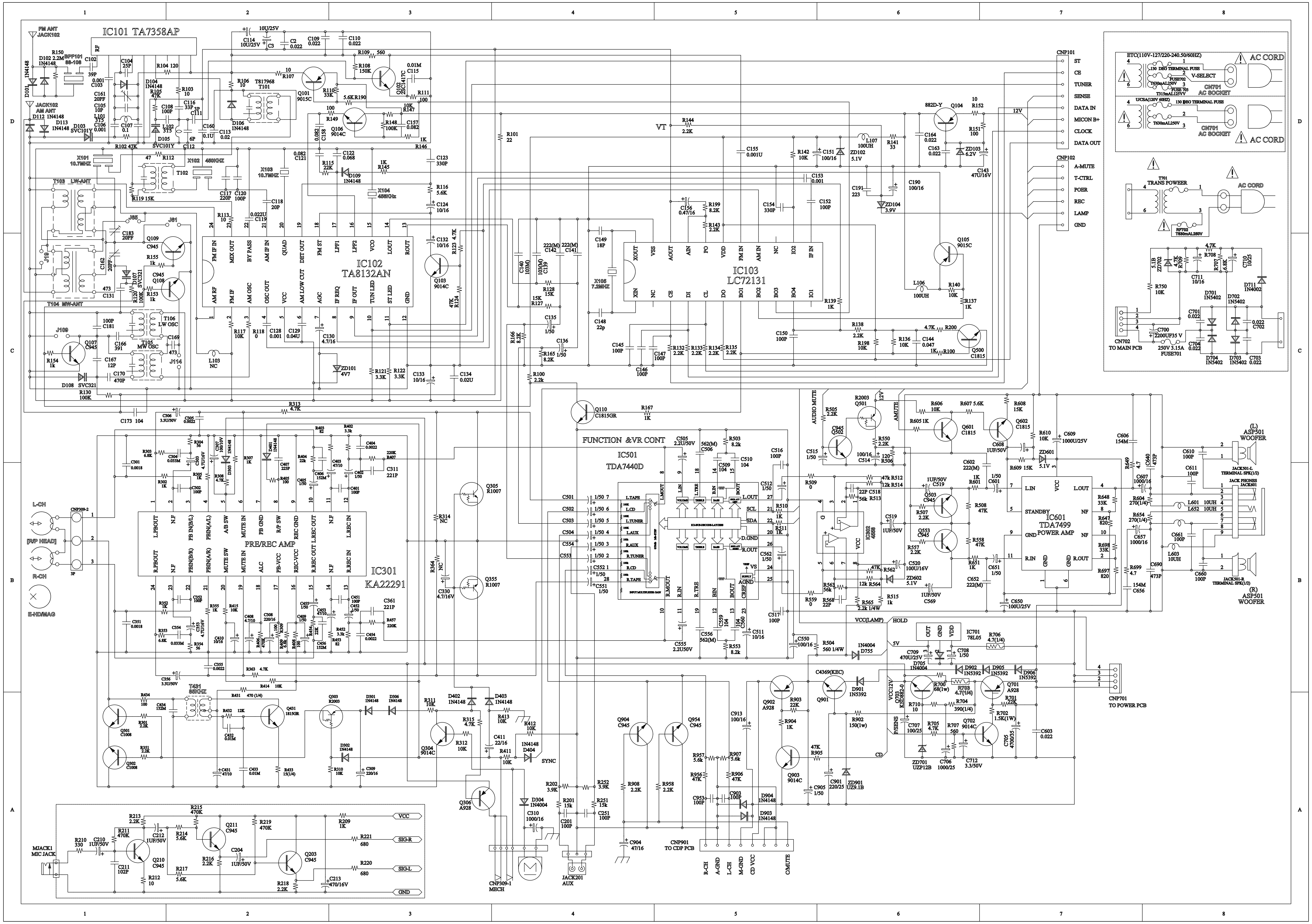
IC101 TA7358AP
IC102 TA8132AN
IC103 LC72131
IC301 KA22291
PRE/REC AMP
IC501 TDA7440D
FUNCTION &VR CONT
IC601 TDA7499 POWER AMP
IC701 78L05
CNP101
ST
CE
TUNER
SENSE
DATA IN
MICON B+
CLOCK
DATA OUT
CNP102
A-MUTE
T-CTRL
POER
REC
LAMP
GND
FM ANT JACK102
AM ANT
T104 MW-ANT
T103 LW-ANT
L-CH
R-CH
[R/P HEAD]
E-HD/MAG
MJACK1 MIC JACK
JACK201 AUX
CNP309-1 MECH
CNP901 TO CDP PCB
CNP701 TO POWER PCB
CN702 TO MAIN PCB
(L) ASP501 WOOFER
(R) ASP501 WOOFER
JACK PHONES JACK601
AC CORD
CN701 AC SOCKET
T701 TRANS POWEER
FUSE701
V-SELECT
VCC
SIG-R
SIG-L
GND
SYNC
AUDIO MUTE
AMUTE
VCC(LAMP)
HOLD
VT
12V
5V
1
2
3
4
5
6
7
8
A
B
C
D

7-5 MAIN/POWER : MM-L4

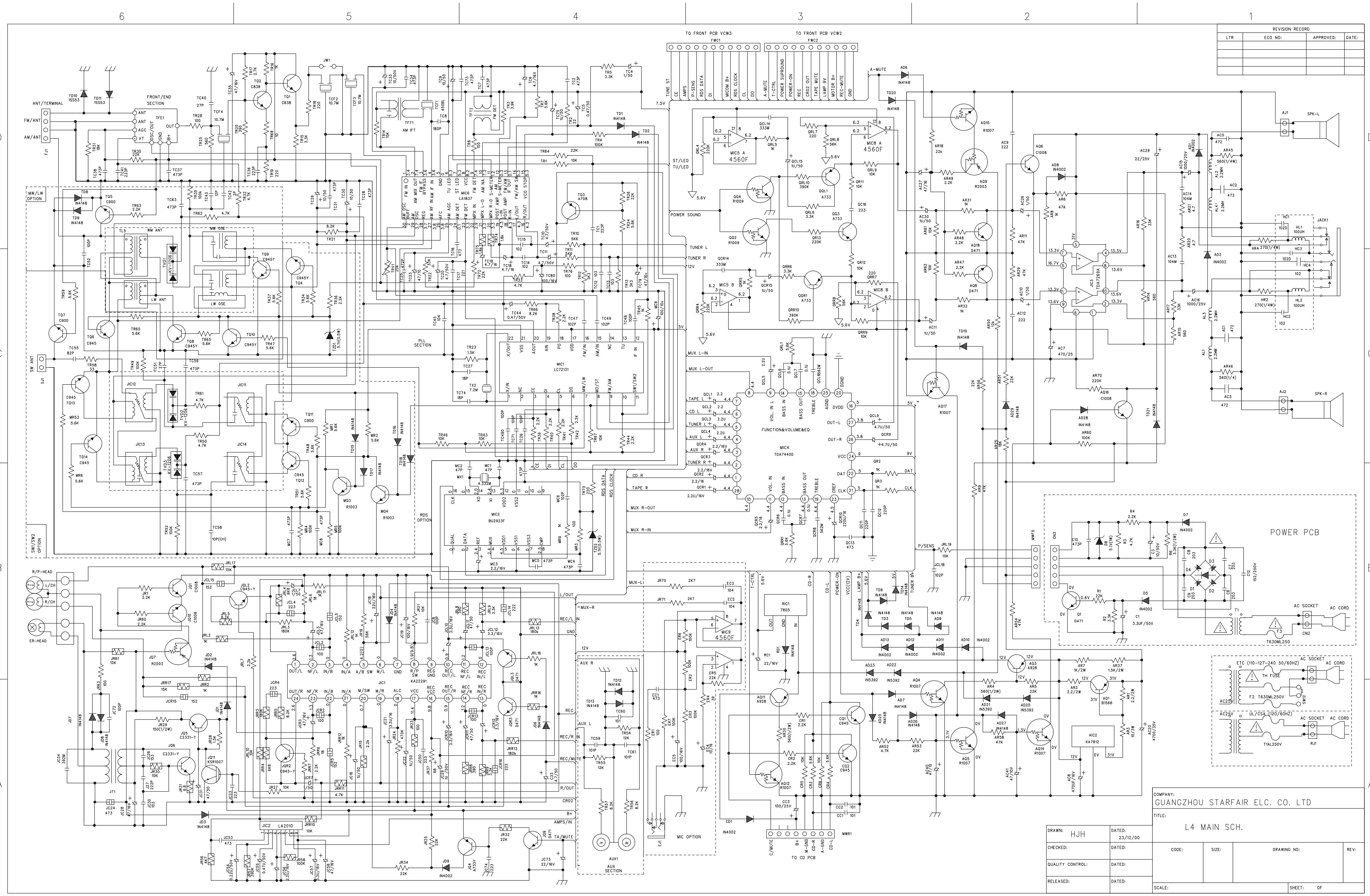
REVISION RECORD
LTR
ECO NO:
APPROVED:
DATE:
TO FRONT PCB VCM3
TO FRONT PCB VCM2
FRONT/END SECTION
ANT/TERMINAL
FM/ANT
AM/ANT
MW/LW OPTION
PLL SECTION
MIC1 LC72131
MIC6 LA1837
MIC4 TDA7440D
FUNCTION&VOLUME&EQ
MIC2 BU2923F
RDS OPTION
SWT/SW2 OPTION
R/P-HEAD
ER-HEAD
JIC1 KA22291
JIC2 LA2010
AUX1 SECTION
MIC OPTION
TO CD PCB
RIC1 7805
MIC5 A 4560F
MIC8 A 4560F
MIC9 4560F
AIC3 TDA7269A
AIC2 KA7812
SPK-L
SPK-R
JACK1
POWER PCB
AC SOCKET
AC CORD
T630ML250
TH FUSE
F2 T630ML250V
T1AL250V
ETC (110-127-240 50/60HZ)
UL/CSA (120/60HZ)
COMPANY:
GUANGZHOU STARFAIR ELC. CO. LTD
TITLE:
L4 MAIN SCH.
DRAWN: HJH
DATED: 23/12/00
CHECKED:
QUALITY CONTROL:
RELEASED:
CODE:
SIZE:
DRAWING NO:
REV:
SCALE:
SHEET: OF
6
5
4
3
2
1
D
C
B
A